FE 160

SENIOR FIELD EFFECT HI-LO METER

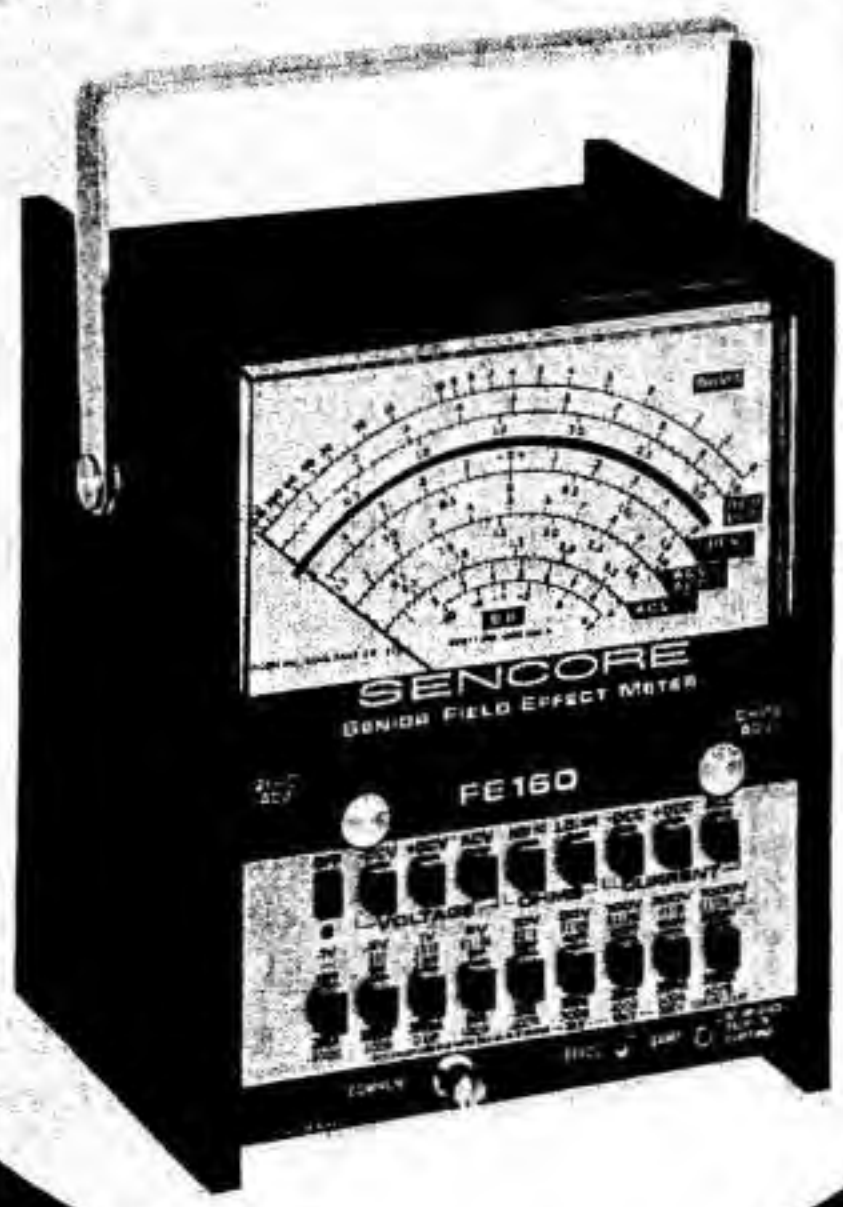

SENCORE

SENCORE SERVICE MANUAL

3200 SENCORE DRIVE, SIOUX FALLS, SOUTH DAKOTA 57107

SAFETY PRECAUTIONS

When testing electronic equipment, there is always a danger present. U expected high voltages can be present at unusual locations in defective equipment. The technician should become familiar with the device that he is working on and observe the following precautions.

1. An isolation transformer should always be used on equipment having the chassis tied to one side of the AC power line.

2. When making test lead connections to high voltage points, remove the power. If this cannot be done, be sure to avoid contact with other equipment or metal objects. Place one hand in your pocket as a safety precaution and stand on an insulated floor to reduce the possibility of shock.

3. Discharge filter capacitors before connecting test leads to them. Capacitors can store a charge that could be dangerous to the technician.

4. Be sure your equipment is in good order. Broken or frayed test leads can be extremely dangerous and can expose the technician to dangerous potentials.

5. Remove the test leads immediately after the test has been completed to reduce the possibility of shock.

6. Do not work alone when working on hazardous circuits. Always have another person close by in case of accident. Remember, even a minor shock can be the cause of a more serious accident, such as falling against the equipment, or coming on contact with higher voltages.

TABLE OF CONTENTS

PAGE

SAFETY PRECAUTIONS 2

DESCRIPTION 5

SPECIFICATIONS 6

OPERATION

Shielded Test Lead and Probe on the FE160. 8
Controls on the FE160 8
Measuring DC Voltages 9
Using the DV Volts Zero Center Scale 10
3 KV DC Jack 10
Measuring DC Current. 10
Measuring AC Voltages 11
Measuring AC Current 12
Measuring Resistance with HI Power Ohms. 13
Measuring Resistance with LO Power Ohms 13
Measuring Resistance of Thermistors 14
Measuring High Voltage with the FE160 15
Storing the High Voltage Probe 16
Measuring Decibles (db) 16
Measuring Small Leakage Currents 18
Overload Protection 19
Fuse Type 19
Converting the FE160 for 230 Volt Operation 18

MAINTENANCE

Disassembly Instructions 19
Calibration of the FE160 19
Building a Meter Calibrator 21

CIRCUIT DESCRIPTION

General 21

TROUBLE CHART. 23

SERVICE AND WARRANTY 24

ILLUSTRATIONS AND CHARTS

Fig. 1 DC Buttons on the FE160 9
Fig. 2 DC Center scales on the Meter 10
Fig. 3 DC Current Buttons on the FE160 11
Fig. 4 AC Volts Buttons on the FE160 12
Fig. 5 Special Ohms Scale on the Meter 14
Fig. 6 db Correction Chart 17
Fig. 7 Voltage vs. Power Chart 17
Fig. 8 Measuring Small Leakage Currents 18
Fig. 9 230 Volt AC Conversion 18
Fig. 10 P.C. Board Layout 20
Fig. 11 Location of Ohms Zero Adjustments 20
Fig. 12 Meter Calibrator 21

ITEMS INCLUDED WITH THE FE160

1 - 39G33 test probe

1 - Black ground lead

1 - Special 3KV test lead

1 - Special 3 amp test lead

2 - spare .6 amp fuses (mounted on rear of case)

1 - Instruction manual

1 - Schematic and parts list

1 - Warranty registration card

1 - Warranty policy

INSTRUCTION MANUAL FOR THE SENCORE FE160 SENIOR HI-LO FIELD EFFECT METER

DESCRIPTION

More and more integrated circuits, transistors and FETs are being used each day in electronic equipment. These components demand that a more accurate meter with lower voltage ranges and low applied voltage on the ohms ranges be used. The ability to read incircuit resistances without having the transistor or diode conduct is more important today than ever before. Sencore engineers have met this demand head on with the FE160 Senior Field Effect meter. All of the features needed in todays electronic maintenance have been put into one easy to use push button meter. Check these features and see why it is the meter for the technician on the bench or the engineer in the lab.

* ne tenth of a volt full scale on AC and DC
* AC and DC current ranges
* True peak to peak AC ranges
* Db scales for audio work
* Calibrated zero center ranges on DC
* Large 7 inch meter with mirrored scale for easy reading
* All AC operated, no batteries to run down at any time
* Low Power Ohms Function (Low applied voltage of .08 volts maximum. Down to .008 volts when measuring 10K or up).
* High input impedance on AC and DC (15 meg on DC, 12 meg on AC).

SPECIFICATIONS

DC VOLTS

10 positive Ranges 0 - 0.1, 0.3, 1, 3, 10, 30, 100, 300, 1000 and 3000
10 Negative Ranges: same as above
10 Zero ctr. Ranges: - 0.05 to 0.05, - 0 0 15 to 0.15, - 0 0.5 to 0.5, - 1.5 to 1.5, - 5 to 5, - 15 to 15, - 50 to 50, - 150 to 150, - 500 to 500, - 1500 to 1500 Input resistance 15 megohm, shunted by 90 pf in probe "NORM" 10pf in 100K "ISOLATION"
Accuracy ± 1.5%
AC rejection: 30 db min

AC VOLTS

9 RMS ranges 0 - 0.1, 0.3, 1, 3, 10, 30, 100, 300 and 1000
9 PP ranges 0 - 0.28, 0.84, 2.8, 8.4, 28, 84, 280, 840 and 2800
Frequency compensated
Input resistance 12 megohm shunted by 90 pf
Frequency response: 1 db 10Hz - 150KHz
3 db 5Hz - 500KHz
Accuracy ± 2.5%

DC Current

10 Positive ranges 0 - 30uA, 100, 300, 1mA, 3, 10, 30, 100, 300 mA
10 Negative ranges: same as above
10 Positive zero center ranges - 15 to 15uA, - 50 to 50uA, - 150 to 150 uA, - 500 to 500uA, - 1.5 to 1.5mA, - 5 to 5 mA, - 15 to 15mA, - 50 to 50uA, - 150 to 150uA and - 1.5 to 1.5A
Internal voltage drop: 0.1V
Accuracy ± 2%

AC Current

10RMS ranges 0 - 30uA, 100, 300, 1mA, 3, 10, 30, 100, 300 and 3A.
Internal voltage drop: 0.1V RMS
Accuracy: ±3%

Ohmmeter

8 high power ranges (1.5V) 0 - 600 ohms, 6K, 60K, 600K, 6M, 60M, 600M and 6000M.
7 low power ranges (0.08V) 0 - 600 ohms 6K, 60K, 600K, 6M, 60M, and 600M
Accuracy ± 2 degrees arc.

Decibel (db)

9 ranges - 20 db, - 10, 0, 10, 20, 30, 40, 50, 60
Reference: 1mV into 600 ohm.

General

Meter: 7" 500 microamp ±2%
Multiplies resistors 1/2% deposited carbon
Power: AC line operation 100 - 130 VAC 50 - 60Hz
convertible to 230 VAC
Voltage requirements for ohmmeter operation supplied from internal electronic supply.
Weight 6 pounds
Dimensions: 9" 7 1/2" x 6"

OPERATION

SHIELDED TEST LEAD AND PROBE ON THE FE160

The FE160 Senior Hi-Lo Field Effect Meter is equipped with a shielded test lead to allow accurate measurements on AC voltages in the presence of stro electrostatic and electromagnetic fields. The special probe is connected to the FE160 with a BNC type connector for ease of replacement if ever necessary. The probe is equipped with a 100K isolation resistor and switch to isolate the cable capacity when making DC measurements in critical circuits such as RF, IF, and sweep circuits. For most measurements including DC voltages, the probe switch is left in the NORM position. The only time that the switch is placed in the ISOLATION position is when it is necessary to isolate the cable capacity from the circuit you are measuring or when using the LO power ohms function is special circuits described under making resistance measurements. When the switch is in the ISOLATION position, the DC voltage will only be 0.6% low. The ISOLATION position should only be used with DC voltage measurements and AC voltages at no more than 60 Hertz. Much greater error will result when measuring AC voltages of higher frequency than 60 Hertz.

CONTROLS ON THE FE160

The FE160 Senior Field Effect Meter are extremely simple and easy to operate. Just depress the desired Function on the Function switch, the d sired range on the Range switch and measure. There are only two othe front panel controls, the OHMS ADJ and the ZERO ADJ. Below is a brief description of each switch or control and how it is used.

RANGE SWITCH: The push button range switch is used to select the desired range for measurement of current, voltage or resistance. When the desired range is depressed, the other button that may have been depressed from a previous measurement is locked out automatically.

FUNCTION SWITCH: The Function switch is used to select the desired function, DC voltage, AC voltage, Hi power ohms, Lo power ohms, DC current, or AC current, and also acts as the on-off switch. The off button turns the power to the FE160 off when it is depressed. When any other function is depressed and the unit is plugged in, the FE160 is turned on. The small red indicator below the OFF button is the pilot light. It will glow red when the unit is on and ready to go. The FE160 is completely solid state and requires no warm up time.

ZERO ADJUST: The ZERO ADJ is used to position the meter pointer o the zero at the extreme left of the meter for most measurements, or over the center zero mark when using the zero center DC ranges.

OHMS ADJUST: The OHMS ADJ control is used to position the meter pointer over the ohms zero mark on the extreme right hand side of the meter with the test lead and common lead shorted together.

MEASURING DC VOLTAGES

Set the switch on the probe to the NORM position; depress either plus or minus DCV button; depress the desired range for as close to a full scale deflection as possible; connect the black lead from the COMMON jack to the chassis or common point and measure the voltage.

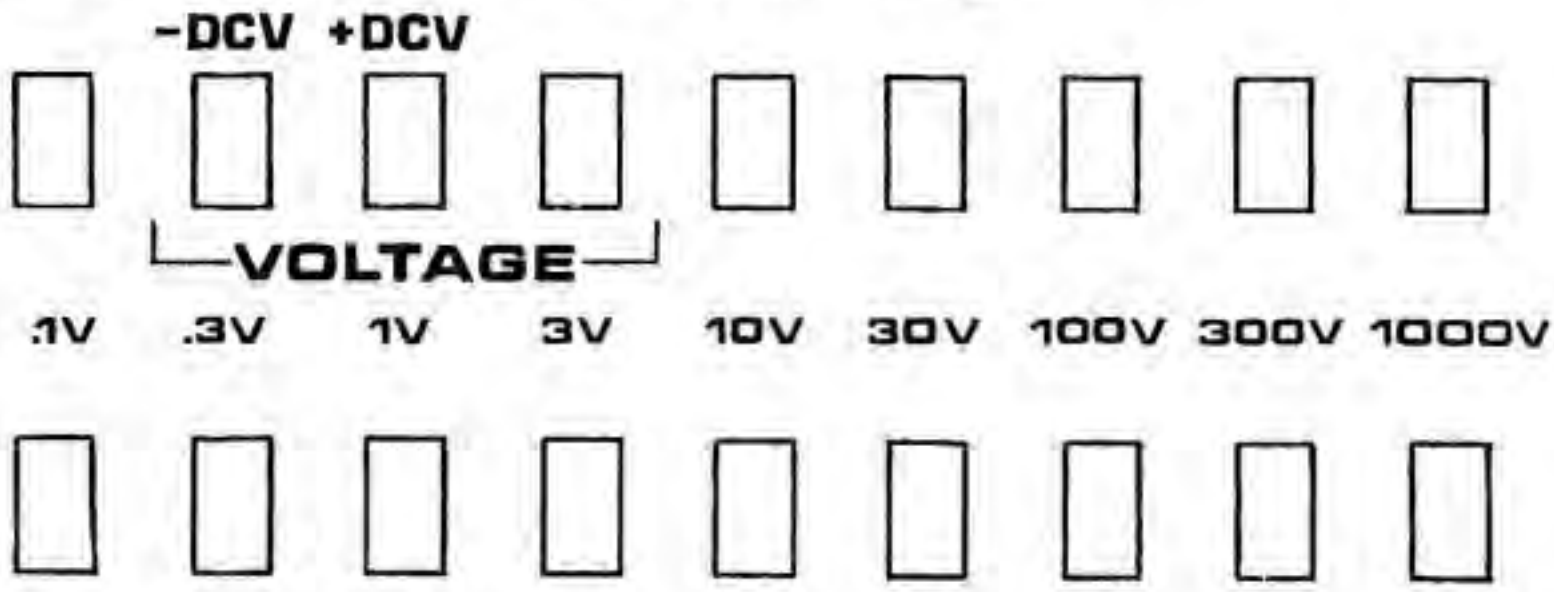

Fig. 1 DC Buttons on the FE160

DC voltage is read on the two black scales marked DCV just above the mirror on the meter. The top DC scale is calibrated from 0 to 1.0 volts, with each small scale division representing .02 volts, and is used with the .1, 1, 10, 100, and 1000 volt ranges. The second DC scale is calibrated from 0 to 3.1 volts with each small scale division representing 0.1 volts, and is used for the .3, 3, 30, and 300, volt ranges. The 0 to 1.0 volt scale is read directly for the 1.0 volt range and multiplied by .1, 10, 100, and 1000 for the .1, 10, 100, and 1000 volt ranges respectively. The 0 to 3.0 volt scale is read directly for the 3.0 volt range and multiplied by .1, 10, and 100 for the .3, 30, and 300 volt ranges respectively.

Example: If the scale indication is .54 on the 0 to 1 volt scale and the 10 volt Range button is depressed, you would multiply .54 by 10 resulting in an actual reading of 5.4 volts DC. If the scale reading is 1.6 on the 0 to 3 volt scale and the .3 volt Range button is depressed, the actual reading would be .16 volts DC.

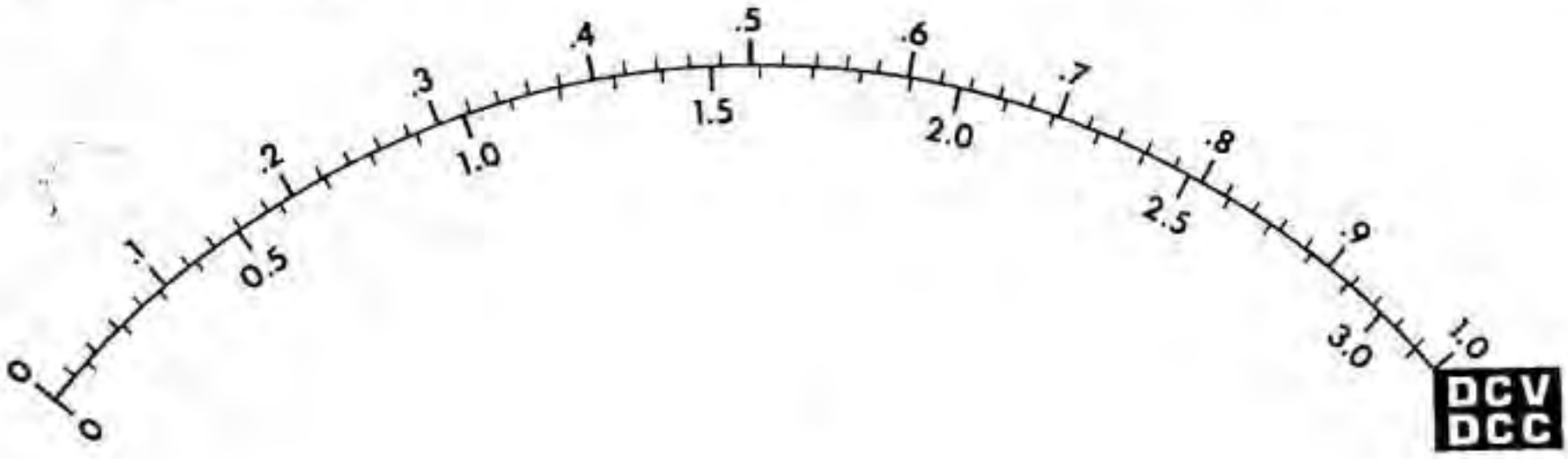

USING THE DV VOLTS ZERO CENTER SCALE

The zero center scales are used to read plus and minus voltages without the necessity of changing polarity with the leads or function buttons. To use the zero center scales, set the probe switch to the NORM position. Depress the plus DCV Function button and adjust the ZERO ADJ until the meter pointer reads at the zero mark on the DCV ZERO CTR scale on the meter just below the mirror. This gives you ranges of plus or minus .5 volts on the upper scale or 1.5 volts on the lower scale. The meter scales are multiplied by .1, 10, 100, or 1000 depending upon which Range button is depressed.

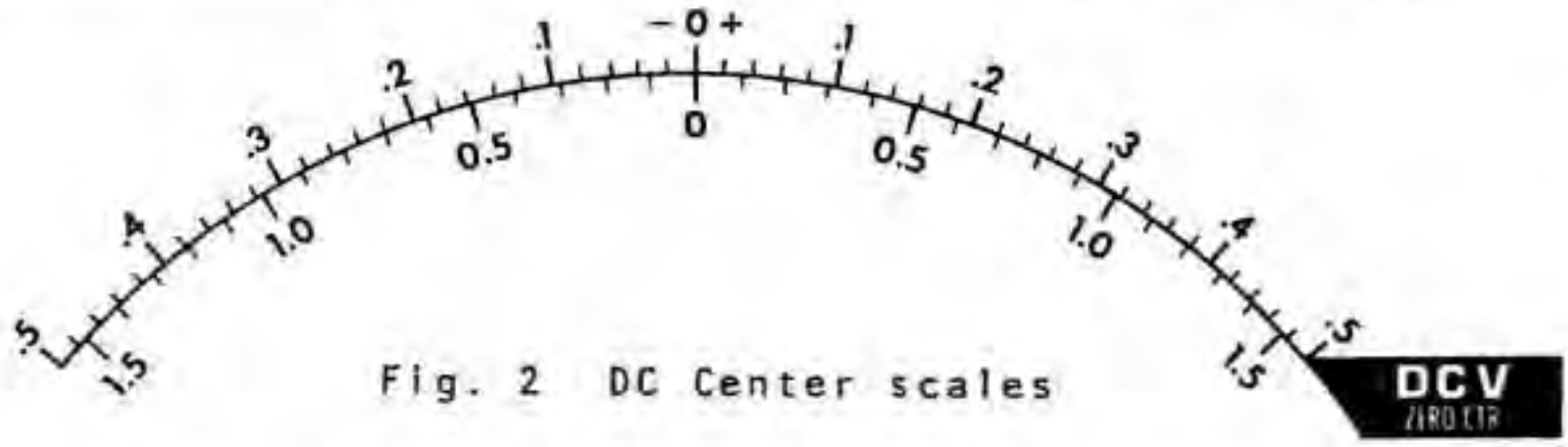

Fig. 2 DC Center scales

Example: If the 300 volt Range button were depressed, then the 1.5 volt scale would be multiplied by 100 resulting in a scale of plus or minus 150 volts. If the .1 volt Range button were depressed, the result would be a plus or minus .05 volts.

If the meter moves up scale to the right, the voltage is positive. If the pointer moves down scale to the left, the voltage is negative. With a calibrated zero center scale, you can not only determine the polarity of a voltage, but also its magnitude.

3 KV DC JACK

The special front panel jack allows the extension of the meters function to 3000 volts DC. To use this special jack, simply plug in the red test lead provided. Depress the plus DCV button on the Function switch and the 1000 volt button on the Range switch. Read the voltage on the 0 to 3 volt DC scale and multiply by 1000. This special jack should be used for DC voltage measurements only. If this jack is used for AC voltage measurements, large errors will result.

MEASURING DC CURRENT

To measure DC current, from 30 microamps to 300 milliamps, set the switch on the probe to the NORM position. Depress the plug DCC button on the Function switch and the desired range of current to be measured on the Range switch. Remove the power from the equipment you are going to measure and connect the test leads from the FE160 in series with the current to be measured. Connect the negative or common lead from the FE160 to the negative source of current and the positive or probe lead to the positive

source of current. (If the current to be measured is unknown, start with the 300 milliamp range and work down.) Reconnect the power to the equipment being measured and read the current on the appropriate meter scale (DCC). If the meter reads in the negative direction, the current polarity is reversed from that expected. Simply depress the negative DCC button for an scale reading.

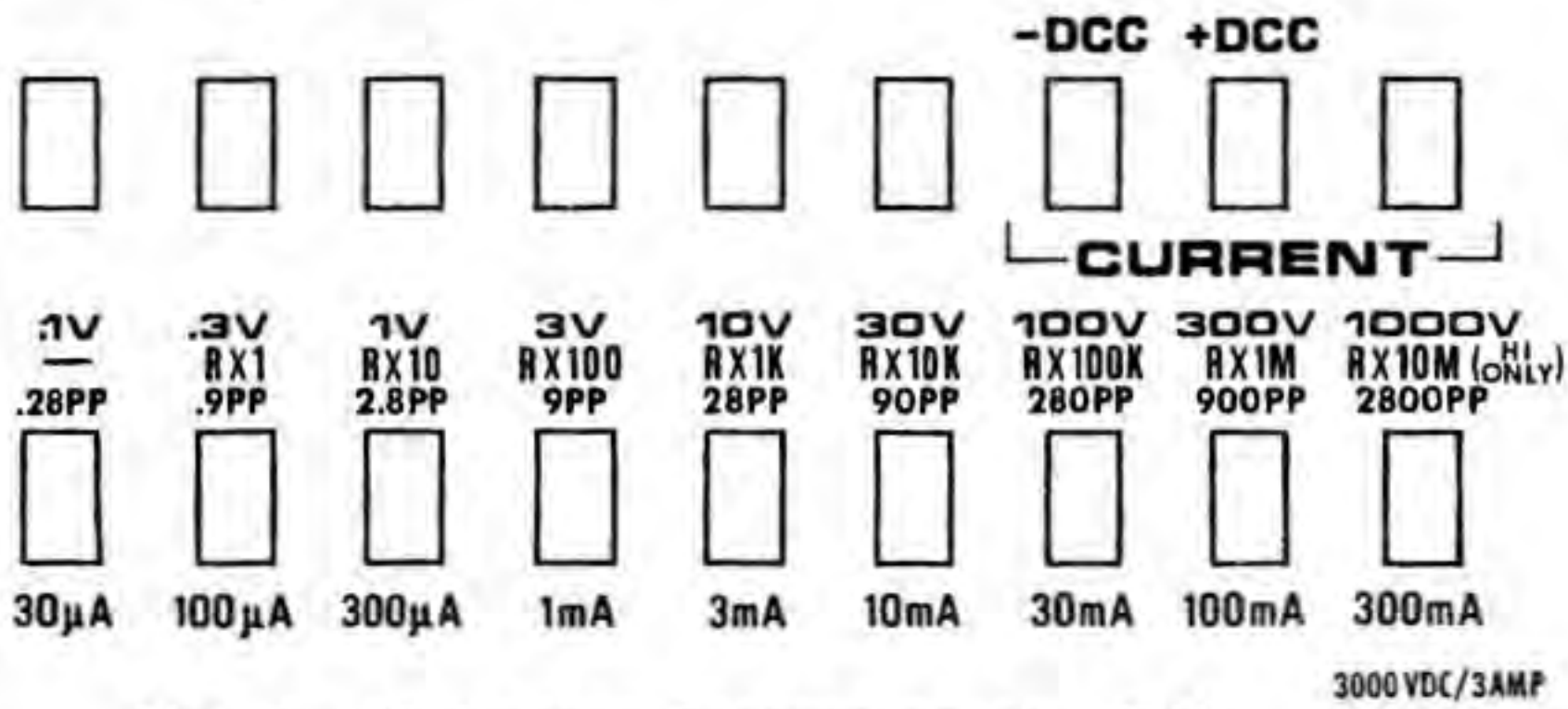

Fig. 3 DC Current Buttons on the FE160

Zero Center DC Current Ranges: By depressing the positive DCC Function button and adjusting the ZERO ADJ control until the meter rests on the center zero of the DCV ZERO CTR ranges on the meter, plus and minus DC current can be easily read. The desired Range is selected similar to the DC voltage zero center scale and are read in the same fashion, except as current.

The 30 microamp to 300 mA ranges are protected by the fuse on the rear of the FE160. The 3 AMP range is a coil of resistance wire and is not protected by the fuse. If it is overloaded, damage is possible, if the overload is not removed in a short period of time.

MEASURING AC VOLTAGES

To measure AC voltages, simply depress the ACV Function button and the desired Range button and measure the voltage. The switch on the probe should be in the NORM position. If readings on AC voltages above 60 Hertz are made with the switch in the ISOLATION position, errors in readings will result.

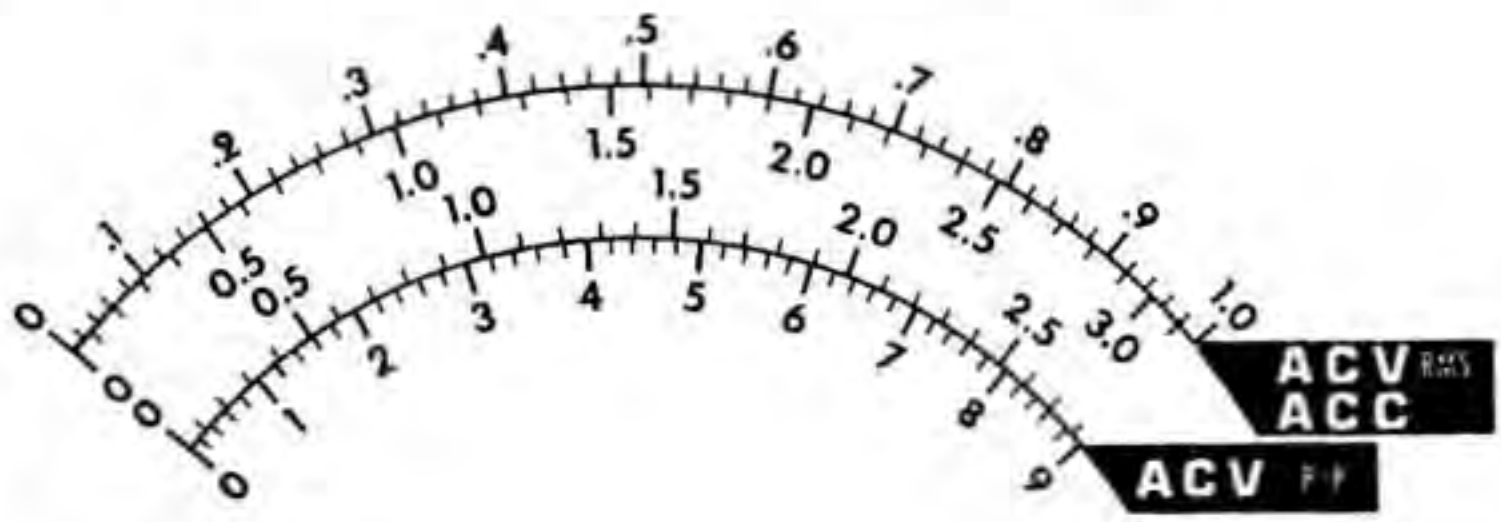

To read RMS voltages, use the bottom two black scales marked ACV RMS. To read peak to peak voltages, use the two red scales marked ACV P-P. The scale readings are multiplied by the same factors as were used in DCV scales. On the 0 to 1 AC RMS scale each small division represents .02 vol and on the 0 to 3 volt scale, each small division represents .1 volts. On 0 to 2.5 volt peak to peak scale, each small division represents .1 volts and on the 0 to 9 volts peak to peak, each small division represents .2 volts.

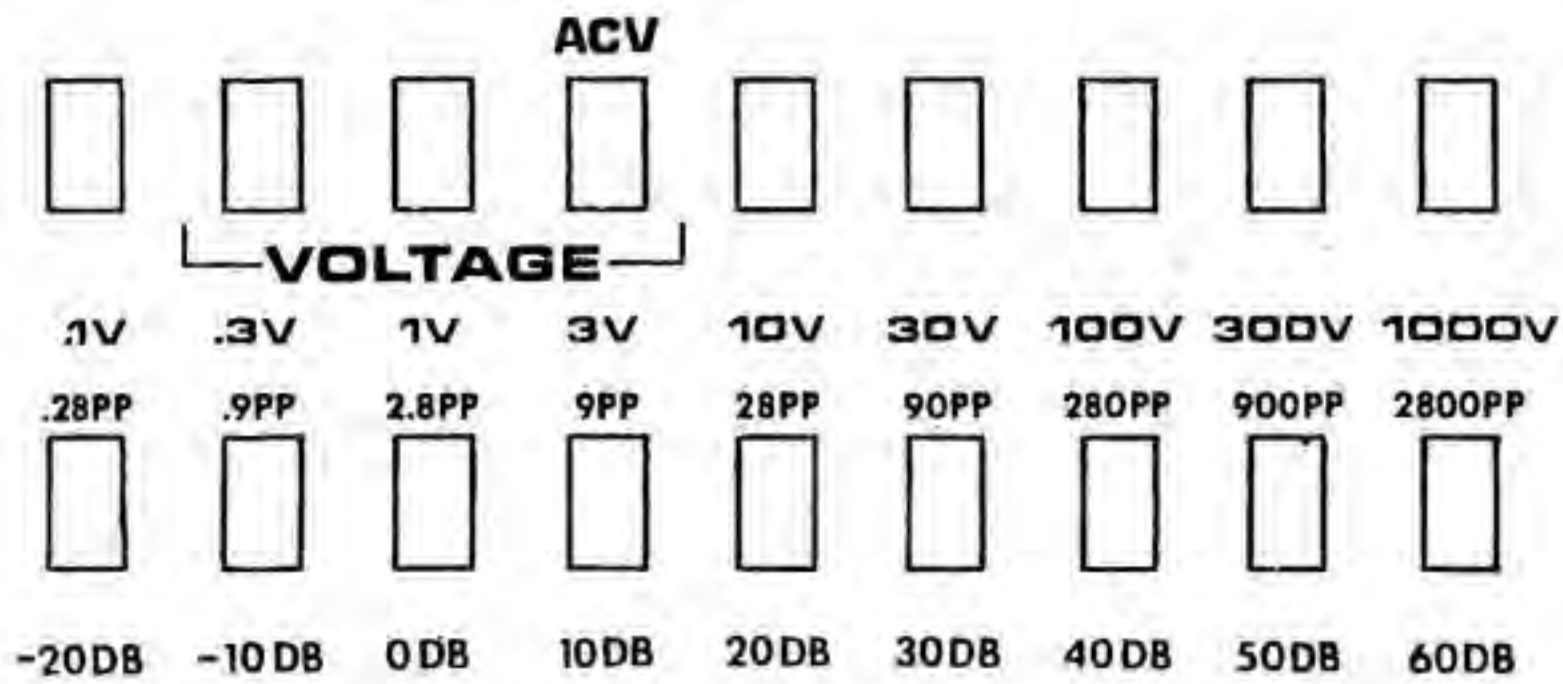

Fig. 4 AC Volts Buttons on the FE160

Example: If the scale indication is .6 on the 0 to 1 volt ACV RMS sca and the .1 volt Range button is depressed, the actual reading would be multiplied by .1 or .06 volts AC RMS. If the scale indication is 1.6 on e ACV P-P scale and the 28VPP Range button is depressed, the actual reading would be 1.6 multiplied by 10 or 16 volts peak to peak.

MEASURING AC CURRENT

Full scale AC current ranges from 30 microamps to 300 milliamps can be measured with the push button Range switch and probe on the FE160. A full scale range of 3 amps is also available with the special 3 amp front panel jack. To measure AC current, depress the ACC Function button and the desired current range on the Range switch. Turn off the equipment to be measured and connect the common lead and probe lead in series with the circuit in which the current is to be measured. Set the probe switch to the NORM position. Turn the equipment on and read the ACC scales on the meter in current.

For the 3 amp range, use the special test lead and common lead connec in the circuit in series with the current to be measured. Depress the 300 mA Range button and read the 0 to 3 ACC scale directly in amps.

The circuit protection for AC current measurements are the same as for DC current and the rear panel fuse protects the FE160 on the 30 microamp to 300 milliamp ranges.

MEASURING RESISTANCE WITH HI POWER OHMS

The Hi Power resistance function uses the standard 1.5 volt applied reference voltage for measuring resistance. To use the Hi Power ranges, depress the HI OHMS button and the Range button that will put the resistance to be measured as close to the center of the scale as possible. The meter pointer will remain on the infinity mark until the leads are shorted. Short the probe lead and common lead together and use the OHMS ADJ control to place the meter pointer over the zero mark on the extreme right hand side of the meter. Be sure the probe switch is in the NORM position. Unshort the leads and use the ZERO ADJ control if necessary to reset the meter pointer over the infinity mark. Recheck the full scale zero by shorting the leads together again. The resistance readings are multiplied by the range listed above the Range button used.

Example: If the meter is indicating 6 and the R10K Range button is depressed, the resistance is 6 multiplied by 10K or 60K.

NOTE: When using the HI OHMS Function of the FE160 for measuring in solid state circuits, the applied voltage will be high enough to cause diodes or transistors to conduct. This conduction can cause the readings to be inaccurate due to the paralleling action of the active device. This action can be used to an advantage for checking the front to back ratio of diodes by reversing the meter leads. The probe lead is positive and the black common lead is negative in the Ohms Functions.

MEASURING RESISTANCE WITH LO POWER OHMS

The Lo Power ohms Function of the FE160 uses an internal 80 millivolt source for measuring resistance. This low applied voltage prevents the junctions of diodes and transistors from conducting, thereby allowing accurate in circuit resistance readings.

The operation is identical to the HI Power ohms Function and the scales are multiplied in the same manner. There will be a need for rezeroing between HI and LO power ohms due to the difference in voltages.

NOTE: The ohms ranges from RX1 to RX1 MEG are used for Lo Power ohms measuring. The RX10 MEG range is intended for use on Hi Power ohms function only. Because of the high impedance and extremely low applied voltage, the readings obtained in Lo Power ohms function on the RX10 MEG range may not be accurate.

ven though there is only .08 volts (80 millivolts) applied in the LO OHMS unction, there are a few germanium type transistors and some special diodes that may conduct slightly with this voltage applied to their junctions. This will occur where the base to emitter resistance is 10,000 ohms or higher, or the transistor has high leakage. You can reverse the test leads or you can reduce the applied voltage to only .008 (8 millivolts) by using the

ISOLATION position on the probe when making resistance measurements. Use this procedure if you are in doubt when making resistance measurements in germanium circuits.

1. Depress the R10K Range button and the LO OHMS Function button.

2. Set the switch on the probe to ISOLATION

3. With the probe and common lead shorted together, adjust the OHMS ADJ control until the meter reads 10 on the OHMS scale.

4. Unshort the leads and adjust the ZERO ADJ until the meter pointer reads on the infinity mark.

5. Repeat steps 3 and 4 again to be sure the meter is correctly "zeroed".

6. Connect the test leads across the resistance to be measured. Subtract 100K from the readings to get the actual resistance measured.

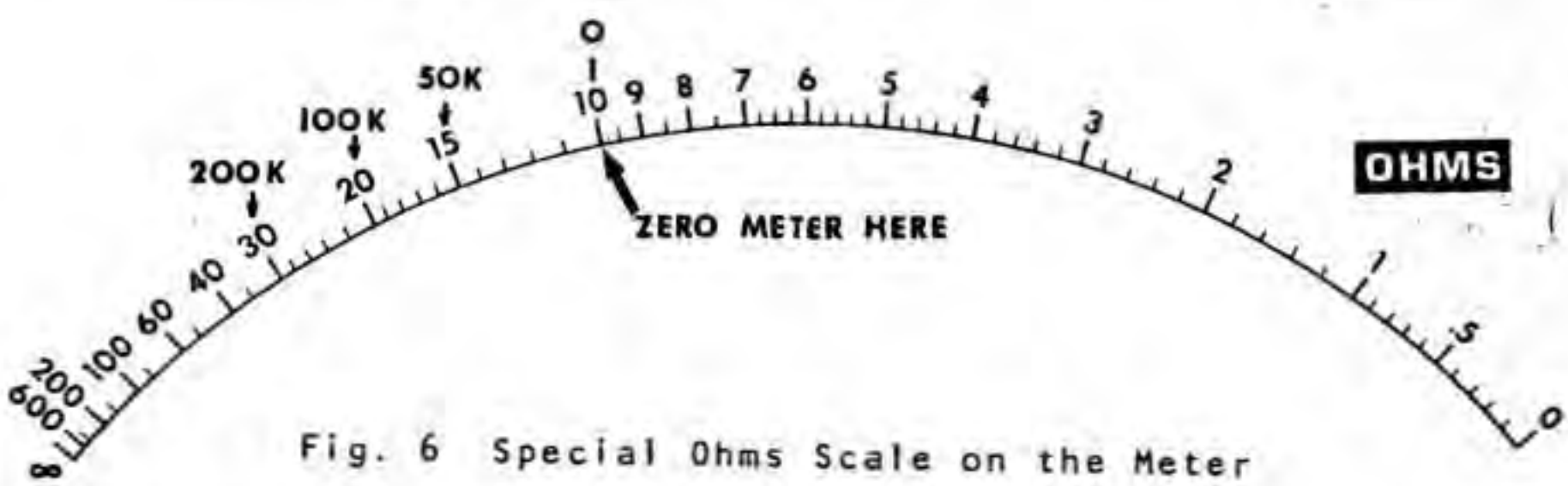

Fig. 6 Special Ohms Scale on the Meter

With the above procedure, 10 now becomes zero, 15 becomes 50K, 20 becomes 100K and so on.

Example: If the meter reads 250 on the ohms scale, the actual resistance would be 150K. If the meter reads 11 on the ohms scale, the actual resistance would be 10K.

MEASURING RESISTANCE OF THERMISTORS

The LO OHMS Function on the FE160 is a must for making accurate resistance measurements of Thermistors of low resistance values. If the measurements are made with the HI OHMS Function, the higher current flow through the thermistor will result in a changing reading due to the heating effect. The Thermistor should not be held in the hand and should be kept away from any other heat to obtain the most accurate reading.

CAUTION: When making resistance measurements, be sure that the power the equipment under test is disconnected. If voltage is applied to the ohms

ranges on the FE160, the fuse F1 may open and have to be replaced before any other measurements can be taken. The fuse is a 3AG .6 Amp type. DO NOT use a slow blow type fuse as inaccuracy and possible damage to the FE160 may result.

SPECIAL NOTE

Over 90% of todays solid state circuits use silicon diodes and transistors. Germanium is mainly used for low level signal type diodes where extremely low level conduction is required for best results.

When making resistance readings using the LO power ohms function of the Sencore Hi-Lo meter, the resistance reading may be lower in value than the actual resistor being measured. This is due to the extremely low levels at which a germanium diode will conduct. This conduction is very small, but when in parallel with a large value resistor, can introduce a slight difference in readings. In the reverse direction, there is a leakage current that will add with the very small current of the LO power ohms function and again cause a reduction in the resistance readings.

This is also noted in Howard Sams Photofact by the astrick in the resistance chart. The greatest accuracy will be in the reverse direction of the diode.

MEASURING HIGH VOLTAGE WITH THE FE160

CAUTION: High voltage is dangerous and great care should be taken when measuring any high voltage. Be sure that the ground lead from the FE160 is connected to the appropriate ground point in the equipment being measured. If the ground lead is not connected, you are merely extending the high voltage closer to you. If the ground lead is connected to the wrong point on ground, you may run the risk of possible damage to the equipment being tested and yourself. Stand away from the equipment being measured and keep one hand in your pocket as a safety measure. High voltage in a color TV is especially dangerous because it is regulated and can go as high as 30,000 volts. If you should come in contact with it, it will not load down.

To measure High Voltage with the FE160, you will require the optional high voltage probe, 39A30. You may obtain this probe from your local parts Distributor or the Sencore Service Department. This probe extends the range of the FE160 to 30,000 volts DC. The probe may also be used with any DC range to act as a 100 times multiplier and increase the input impedance of the FE160 to 1500 megohms. The .1 volt range becomes a 10 volt range when using the 39A30 high voltage probe.

The 39A30 probe is made to come apart for easy storage when not being used. The body of the probe plugs into the handle with a simple banana plug.

To use the 39A30 high voltage probe on the FE160, depress either the plus DCV or minus DCV Function button depending if the voltage is positive or negative. Set the probe switch to NORM and plug the end of the probe into the handle of the 39A30 high voltage probe. Connect the ground lead from the FE160 to the common test point on the equipment to be measured. Be sure to read the first paragraph labeled CAUTION and observe these tips when using the 39A30 high voltage probe on the FE160. Depress the 3KV, 10KV, or 30KV Range button for the desired range of voltage to be measured. The actual reading on the meter is multiplied by 10,000 on the 0 to 3 volt DCV scale for 30KV range, by 10,000 on the 0 to 1 volt scale for the 10KV range, and by 1,000 on the 0 to 3 volt scale for the 3KV range.

STORING THE HIGH VOLTAGE PROBE

The optional high voltage probe, 39A30, can be stored on the back of the FE160 in the clips already provided. The probe comes in two parts; the handle unplugs from the barrel. The larger set of clips holds the handle and the smaller set, the barrel. Simply press them into the clips to hold them securely in place.

MEASURING DECIBLES (DB)

The FE160 has a convenient db scale for easy db measurements. The nine AC voltage ranges are in perfect 10 db steps, so that starting from "0" db on the 1.0 volt range, you add 10 db for each range above 1 volt and subtract 10 db for each range below 1 volt. Db measurements are actually a measure of the ratio between the power in the circuit under test and some reference power level. The reference level used in the FE160 is 1 milliwatt into 600 ohms. If the impedance being measured across is other than 600 ohms, you will have to use the chart in figure 7 to determine the actual power level or db.

Example: The scale reading is -4 db, the 100 volt Range button is depressed and the impedance is 6 ohms. The 100 volt range is 4 ranges higher than the 1 volt range, so we must add 40 db to the meter reading giving us 36 db. Using the chart in figure 7, the correction factor is plus 20 db, or an actual db measurement of 56 db.

The chart in figure 8 can also be used to determine the actual power being dissipated in a circuit if the circuit impedance along with either the applied voltage, or the db as measured on the FE160 are known. The chart in figure 8 also shows the relationship of AC volts to db. If the AC voltage is increased ten times, the db reading goes up by 20 db.

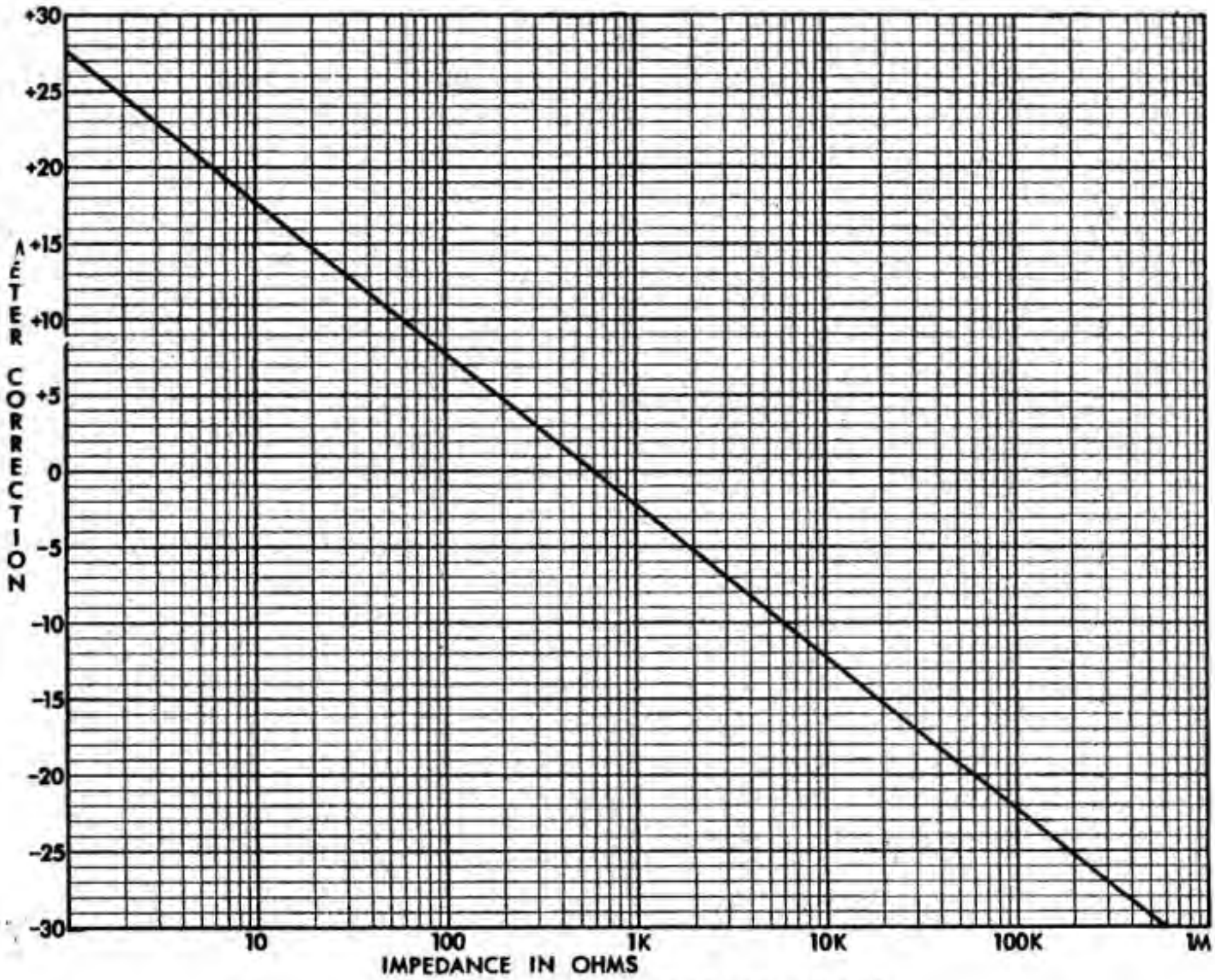

Fig. 7 db Correction Chart

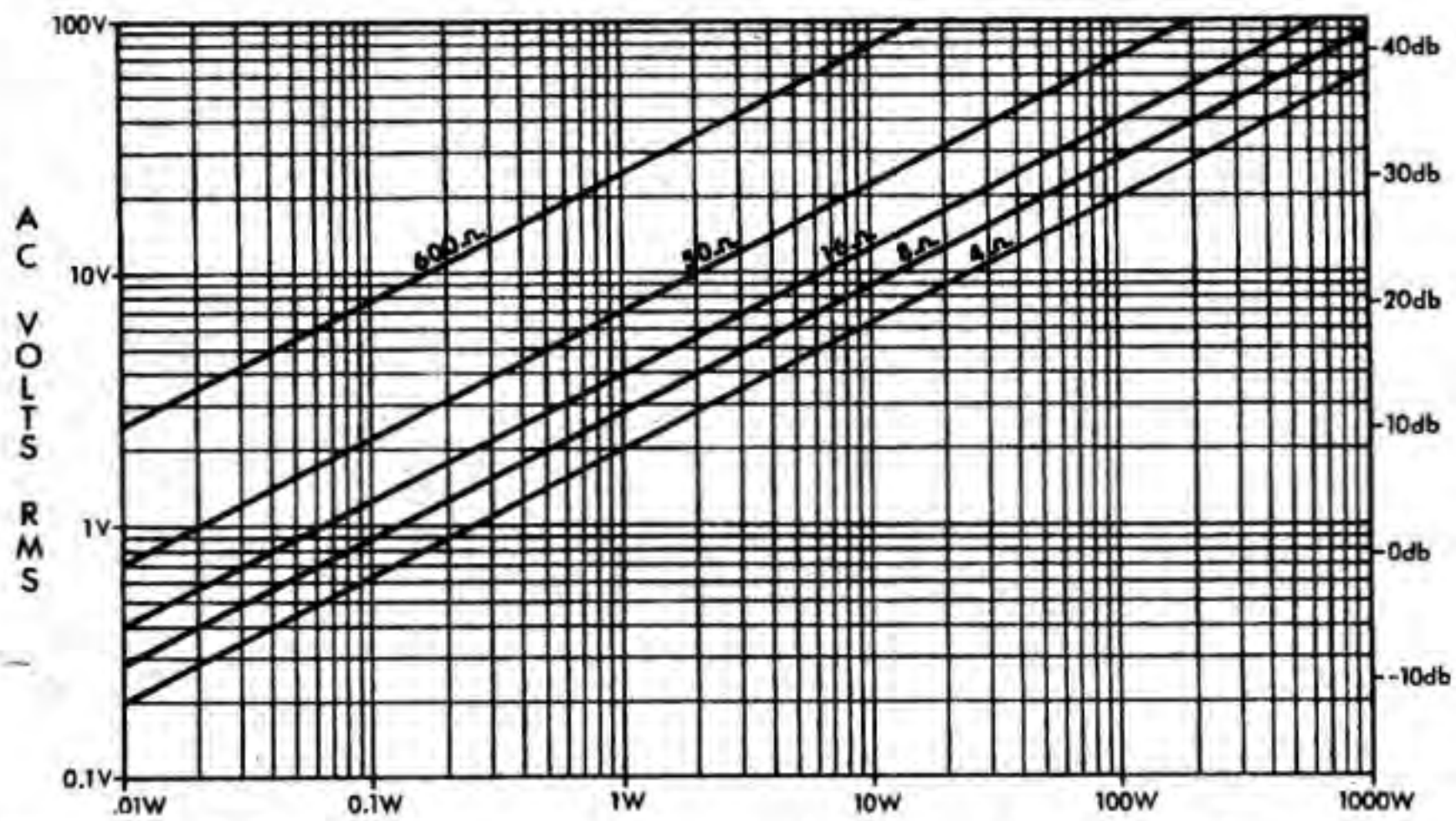

Fig. 8 Voltage vs. Power Chart (sine wave conditions only)

NOTE: The db scales on the FE160 and the charts of figures 7 and 8 apply only when the voltage being measured is a pure sine wave as from an audio generator. The FE160 is a true peak to peak reading meter and the complex waveform of music or voice material will not give a true RMS reading required for the db system to work correctly.

MEASURING SMALL LEAKAGE CURRENTS

The FE160 can be used to measure extremely low leakage currents in the nanoamp range of 0 to 10 nanoamps full scale. All that is required is a power supply rated at the test voltage of the device being measured and two 15 megohm resistors. Connect the two 15 megohm resistors in series across the input terminals of the FE160 as shown in figure 9. Connect the power supply, the device under test and the FE160 in series as shown in figure 9.

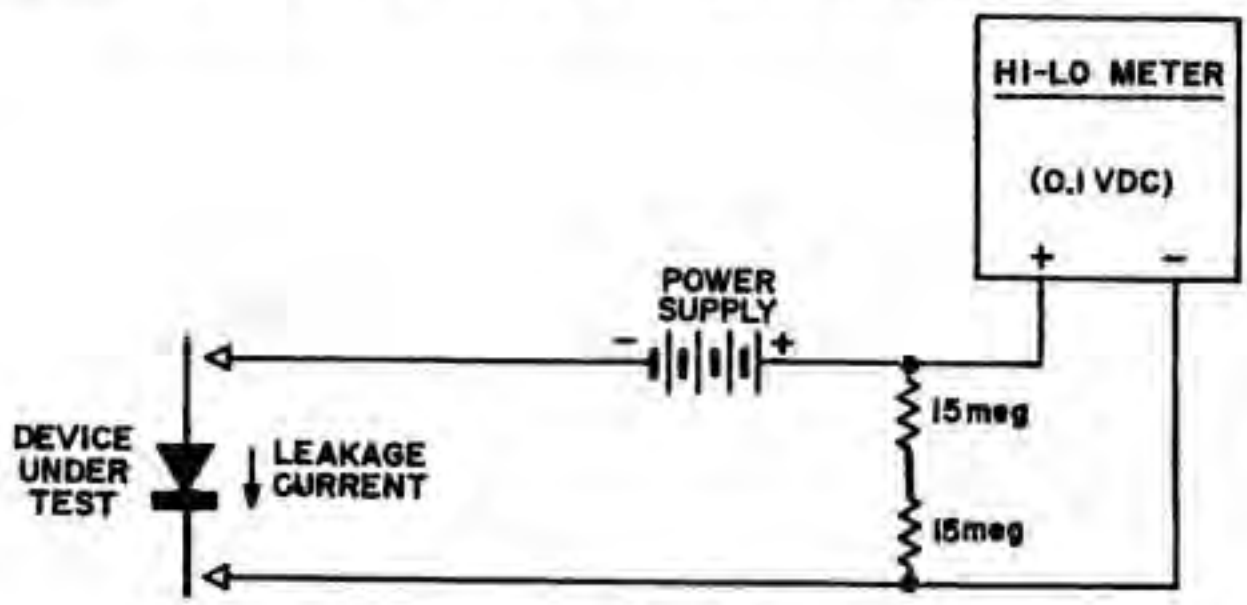

Fig. 9 Measuring Small Leakage Currents

Depress the .1 volt Range button and the plus DCV Function button and set the switch in the probe to NORM. Read the 0 to 1 volt DC scale on the FE160 and multiply by 10 to obtain the reading in nanoamps.

CONVERTING THE FE160 FOR 230 VOLT OPERATION

The conversion of the FE160 to 230 VAC is fast and simple. Just remove the jumpers connecting the two white and two black primary wires of the transformer from the terminal strip. Connect the two end terminal strip points with the black and white primary transformer wires together and the unit is ready for 230 VAC operation. To convert back to 115 VAC, simply seperate the end black and white wires and connect jumpers from the white to the other white wire and the same with the black wire, connecting the two primarys back in parallel.

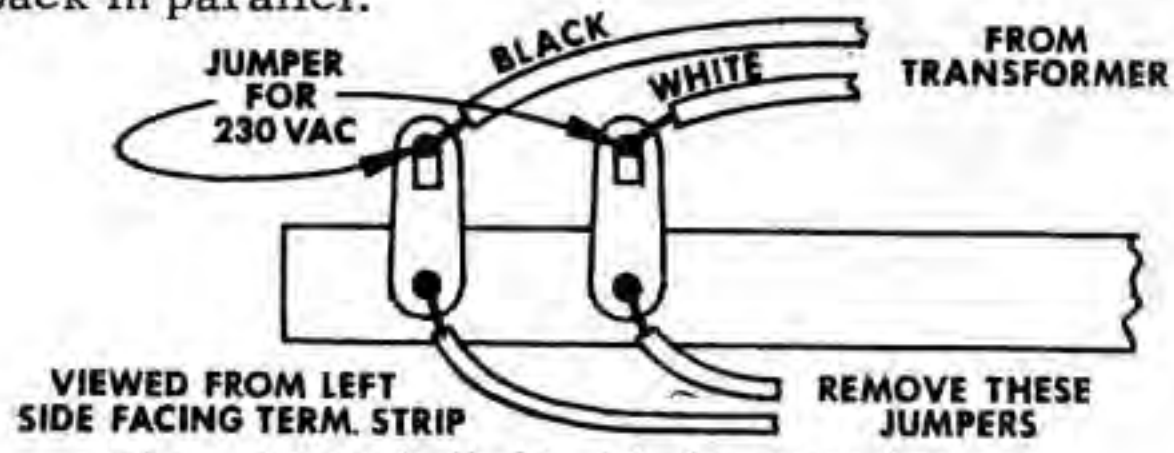

Fig. 10 230 Volt AC Conversion

OVERLOAD PROTECTION

Your FE160 is protected against accidental overloads on all ranges and functions. The voltage ranges are protected because the high input impedance of the FE160 limits the amount of current that can flow into the meter to damage it. On the resistance and current functions, the fuse F1 on the FE160 protects both the meter movement and the circuitry of the FE160. This fuse should be replaced with one of the same type so that the protection feature or accuracy of the FE160 are not affected. Input switching and components are protected against accidental overload by a spark gap. Meter protection is provided by a germanium diode across its terminals.

FUSE TYPE

3AG .6 AMP. DO NOT use a slow blow type fuse. Inaccuracy and possible damage to the HI-LO meter may result.

MAINTENANCE

DISASSEMBLY INSTRUCTIONS

If it ever becomes necessary to recalibrate or repair your FE160, it can be accomplished simply by removing the unit from its case to expose all calibration controls and parts. There are four screws holding the FE160 in its case, two on the rear of the instrument and two on the bottom of the front panel. Remove the four screws and slide the unit from its case. To reassembly the FE160, reverse the procedure.

CALIBRATION OF THE FE160

For the location of the following adjustments, refer to the PC board layout, figure 11, and figure 12.

DC BALANCE

The DC balance control is adjusted so that the front panel ZERO ADJ can position the meter pointer over the zero center mark on the zero center scales. To adjust this control, depress the plus DCV Function button and adjust the DC BAL located on the PC board until the meter reads .7 on the 0 to 1 scale.

ZERO RANGE ADJUSTMENT

Set the front panel ZERO ADJ to the physical center of its rotation. The Range and Function buttons to be as above. Adjust the ZERO RANGE ADJ on the PC board so that the meter reads 0 on the left hand side of the meter scales. Recheck the DC BAL adjustment and readjust if necessary.

DC VOLTS AND DC CURRENT CALIBRATION

When the DC voltage ranges are calibrated, the current range is automatically calibrated. Before calibration, check the mechanical zero of the meter

with the FE160 turned off. To calibrate, depress the .1V Range button and the plus DCV Function button. Set the probe switch to NORM and apply exactly .1 volts DC to the input. Adjust R41, the DC CAL control on the PC board for exactly 1.0 on the 0 to 1 DCV scale.

AC VOLTS AND AC CURRENT CALIBRATION

Like the DC calibration, the AC voltage calibration is for both voltage and current. The mechanical zero should be checked on the meter as was done DC calibration. Depress the .1 volt Range button and the ACV Function button. Set the probe switch to NORM and short the test leads together and zero the meter. Apply exacly .1 volt AC RMS sine wave, (60 Hz to 1 KHz) to the input terminals and adjust R36, the AC CAL on the PC board until the meter reads 1.0 on the 0 to 1 ACV scale.

LO AND HI POWER INTERNAL ZERO ADJUSTMENTS

The RX10K and HI power internal ohms adjustments make the rezeroing of the ohms scales for each range or between HI and LO power ohms unnecessary. These adjustments will not need resetting unless some part of the ohms power supply has been replaced.

With the FE160 plugged in and turned on, depress the LO power ohms Function button and the RX1 Range button. Zero the meter as you would before making any resistance measurements. With the FE160 zeroed, depress the RX10K Range button and adjust the RX10K ADJ until the meter is zeroed on the right hand side of the ohms scale. The RX10K ADJ is located on the right hand side of the Range switch as viewed from the rear of the FE160. With the LO power ranges set, depress the HI power ohms Function button, leaving the RX10K Range button depressed, and adjust the HI POWER OHMS ADJ until the meter is again zeroed on the right hand side of the ohms scale. This sets up the front panel OHMS ZERO control on all Functions and Ranges of ohms eliminating the necessity of rezeroing when changing ranges or functions in ohms.

Fig. 11 P.C. Board Layout (see schematic sheet for layout)

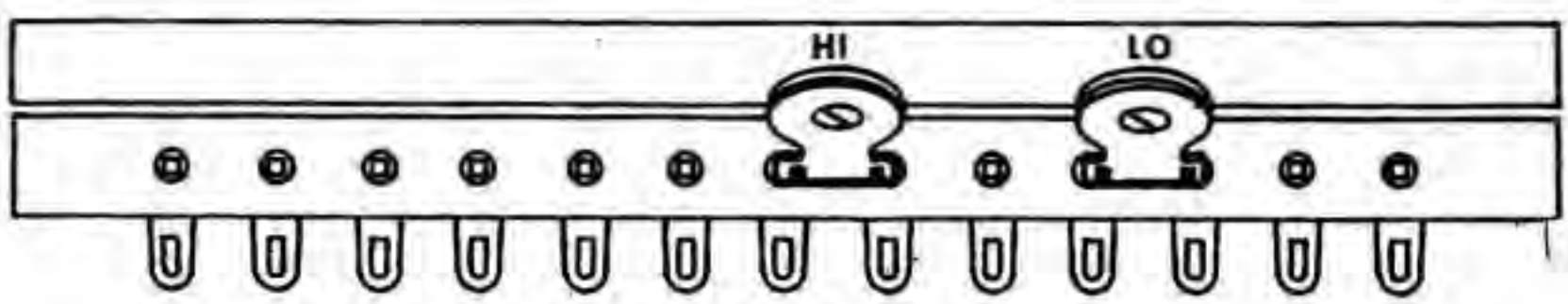

REAR VIEW OF RANGE SWITCH

Fig. 12 Location of Ohms Zero Adjustments

BUILDING A METER CALIBRATOR

If an accurate source of .1 volt AC and DC is not readily available for calibration, you may wish to build a simple meter calibrator and check such as the one in figure 13. The accuracy of the calibration with this circuit will be the accuracy of the two mercury batteries which is in the order of 1.5% on a new cell. The 2.8 volt battery shown is two 1.4 volt mercury batteries in series.

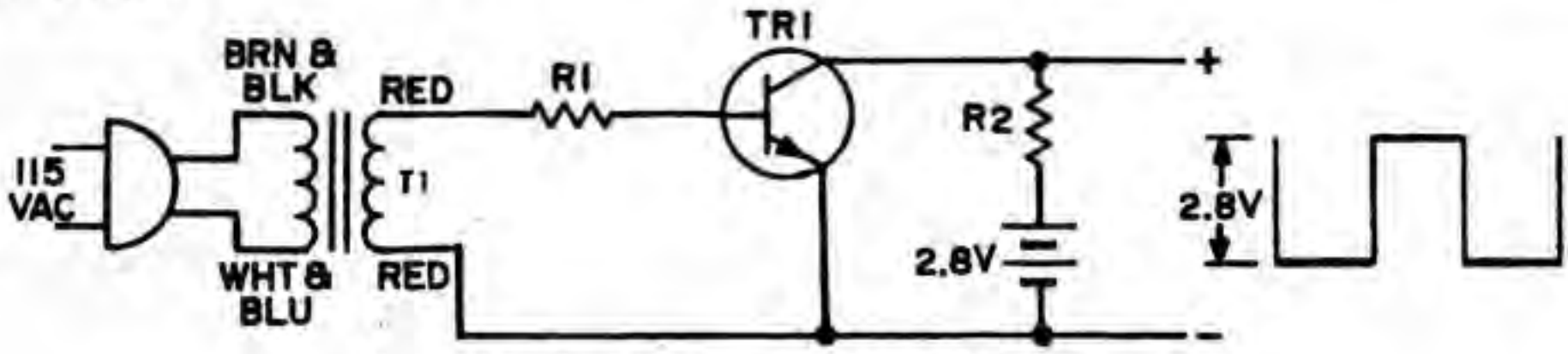

Fig. 13 Calibrater for HI-LO meter

T1 - Any low current power transformer with a secondary voltage between 6 and 12 volts.

TR1 - 2N5172 silicon transistor or equivalent

R1 - 5.6K 1/2 watt 10% resistor

R2 - 10K 1/2 watt 10% resistor

With the AC signal from the transformer connected to the base of the transistor, the circuit will produce a square wave of the same peak to peak value as the battery voltage, (2.8 volts). Due to the slight error of reading peak to peak meter, the 2.8 volts peak to peak signal will indicate exactly 3.0 on the FE160 meter scale when properly calibrated. When the AC signal is removed from the base of the transistor, the output will be the battery voltage which may be used to calibrate the DC scales of the FE160. Adjust the DC calibration control for exactly 2.8 volts DC.

CIRCUIT DESCRIPTION

The Sencore FE160 Senior Field Effect meter uses a balanced bridge impedance converter consisting of two Field Effect and two bi-polar transistors. This circuitry provides high input impedance and excellent stability. When measuring AC volts an additional amplifier stage which is compensated against changes in voltage, temperature and frequency is used to drive the peak to peak detector.

DC Voltage: The DC voltage at the input passes through the AC rejection filter consisting of R1 and C1 to the voltage divider (R2 through R10). The Range switch S3B selects the required input voltage to be applied to the gate of TR1. The FET TR1 provides the necessary high input impedance, and drives the base of TR2. The source output of TR1 and the collector output of TR2 are in parallel, with both output currents flowing through the common load resistor R29. TR2 provides the necessary current gain required to drive the meter. The TR3 and TR4 section of the balanced impedance con-

verter is held constant, because the gate of TR4 is tied to ground through the AC cal control R36. The meter, in series with the DC cal control, is connected between the collector of TR2 and the collector of TR3, with the positive meter lead connected to the collector of TR2.

This balanced impedance converter is temperature stable because any change in temperature will affect both sides of the balanced circuit equally, keeping the circuit balanced. The circuits is compensated against changes in supply voltage, because the voltage at the source of TR4 remains nearly constant and is used as a bias voltage of TR1 gate. It is applied to the gate of TR1 through resistor R40, the DC balance control R39 and the zero adjust R50.

DC Current: When measuring DC current, one of the standard resistors, R17 through R25, is selected by the Range switch to be put in series with the circuit to be measured. The circuit described in the preceding paragraph (DC voltage) is then used to measure the voltage across the standard resistor. The fuse F1 protects R17 through R24, or up to the 300 mA range. The meter movement itself is protected on all ranges because it is isolated thru the impedance converter and shunted with a diode.

Resistance (HI POWER): To measure the resistance of an unknown resistor, FE160 connects the unknown resistance, a 1.5 volt battery, and a standard resistor in series. The FE160 then measures the voltage across the unknown resistance. The ohms adjust control has the same effect as the DC cal control, in that it is connected in series with the meter and is used to adjust the sensitivity of the meter. When there is an infinite unknown resistance (open circuit) the FE160 will measure the full battery voltage. The ohms adjust control is adjusted with the test leads open, so that the full voltage will read infinity on the meter. When the FE160 leads are shorted together, the voltage will be zero, and the meter will read zero. If an unknown resistance is exactly equal to the standard resistance in the FE160, the voltage across the unknown resistance will be one half of the total, or the meter will read one half scale. With a standard resistor of 600 ohms, and the unknown resistance of 600 ohms, one half of the voltage would be across the unknown resistor, and the FE160 would read one half scale. A reading of 1/2 scale would be equal to 600 ohms. The S3A section of the Range switch is used to select different standard resistors for the different resistance ranges. All resistance standard resistors, except the RX10 and RX100 ranges, are protected from overloads by the fuse F1.

Resistance (LO POWER): The LOW POWER ohms function on the FE160 is to be used when working on solid state equipment in cases where the resistance of the resistors alone, and not the diode junction resistance of the transistors is important. The LO POWER ohms function applies only .08 volts (80 mv) to the circuit being measured, so that the diode junctions of any transistor will not conduct.

The LO POWER ohms function operates the same as the HI POWER ohms function, with the exception that a voltage divider comprised of R14 and R15 is used to set the test voltage to .08 volts. The DC voltage measuring circuit of the FE160 is still connected across the unknown resistance, but the sensitivity of the voltage measuring circuit is increased to that .08 volts will read full scale. The S3A section of the Range switch is used to select different standard resistors for the ohms ranges.

AC Voltage: The AC voltage at the input is coupled through C1 to the top of the voltage divider comprised of R2 through R10. The S3B section of the Range switch selects the voltage to be applied to the input of TR1. TR1 acts as a source follower. The output of TR1 and TR2 is coupled through C12 and R38 to the input of TR5. TR5 acts as a common emitter amplifier to provide a voltage gain of approximately 10 times. TR5 drives the peak to peak detector comprised of C12, C16, CR3, and CR4. A negative output from the peak to peak detector is applied through R33 and the AC cal control (R36) to the gate of TR4. The DC voltage applied to the gate of TR4 caused the bridge to be unbalanced and the meter to read the AC voltage.

TROUBLE CHART

Symptom	Probable cause	Corrective Measure
Unit dead, meter does not read:	Fuse blown CR9, CR10 Unit not plugged into AC	Check fuse on rear of meter Check diodes for open or short Plug unit in
3 amp range inoperative;	Burned out R3	Replace resistor
AC volts readings Inaccurate:	Probe switch in wrong position: Defect in P/P detector; CR6 or CR7, C16 R40 changed value;	Set switch on probe to "NORM" Check components and replace when necessary; Check resistance of R4
Meter reads up scale in .1VDC position only and on RX1M range only;	Defective TR1, or CR5	Check components for leakage and replace when necessary.
Meter reads up scale in .1VAC position;	AC Pickup (Normal condition in strong electrical field);	Short test leads together to remove AC pickup;
Meter zero changes from function to function	Mechanical zero off	Reset mechnical zero with meter turned off

SERVICE AND WARRANTY

You have just purchased one of the finest field effect voltmeters on the market today. The Sencore HI-LO Meter has been inspected and tested twice at the factory to insure the best quality instrument to you. If something should happen, the HI-LO Meter is covered by a standard 90 day warranty as explained on the warranty policy enclosed with your instrument.

For the best service on out of warranty work, send the HI-LO Field Effect Meter directly to the factory service department. Be sure to state the nature of your problem to insure faster service.

If you wish to repair your own HI-LO Field Effect Meter, we have included a schematic, parts list, and trouble chart. Any of these parts may be ordered directly from the factory service department.

We reserve the right to examine defective components before an in warranty replacement part is issued.

SENCORE

NO. 1 MANUFACTURER OF ELECTRONIC MAINTENANCE EQUIPMENT

3200 SENCORE DRIVE, SIOUX FALLS, SOUTH DAKOTA 57107

Form 609

SENCORE

NO 1 MANUFACTURER OF ELECTRONIC MAINTENANCE EQUIPMENT

3200 SENCORE DRIVE, SIOUX FALLS SOUTH DAKOTA 57107

SCHEMATIC AND PARTS LIST FOR FE160 HI-LO METER

Early runs of the FE160 made use of the same P.C. board as the FE20. Different transistors and different component values were used to arrive at the increased sensitivity of the FE160. Below is a cross reference between the schematic reference numbers in the FE160 schematic, and the reference numbers on the FE20 P.C. board.

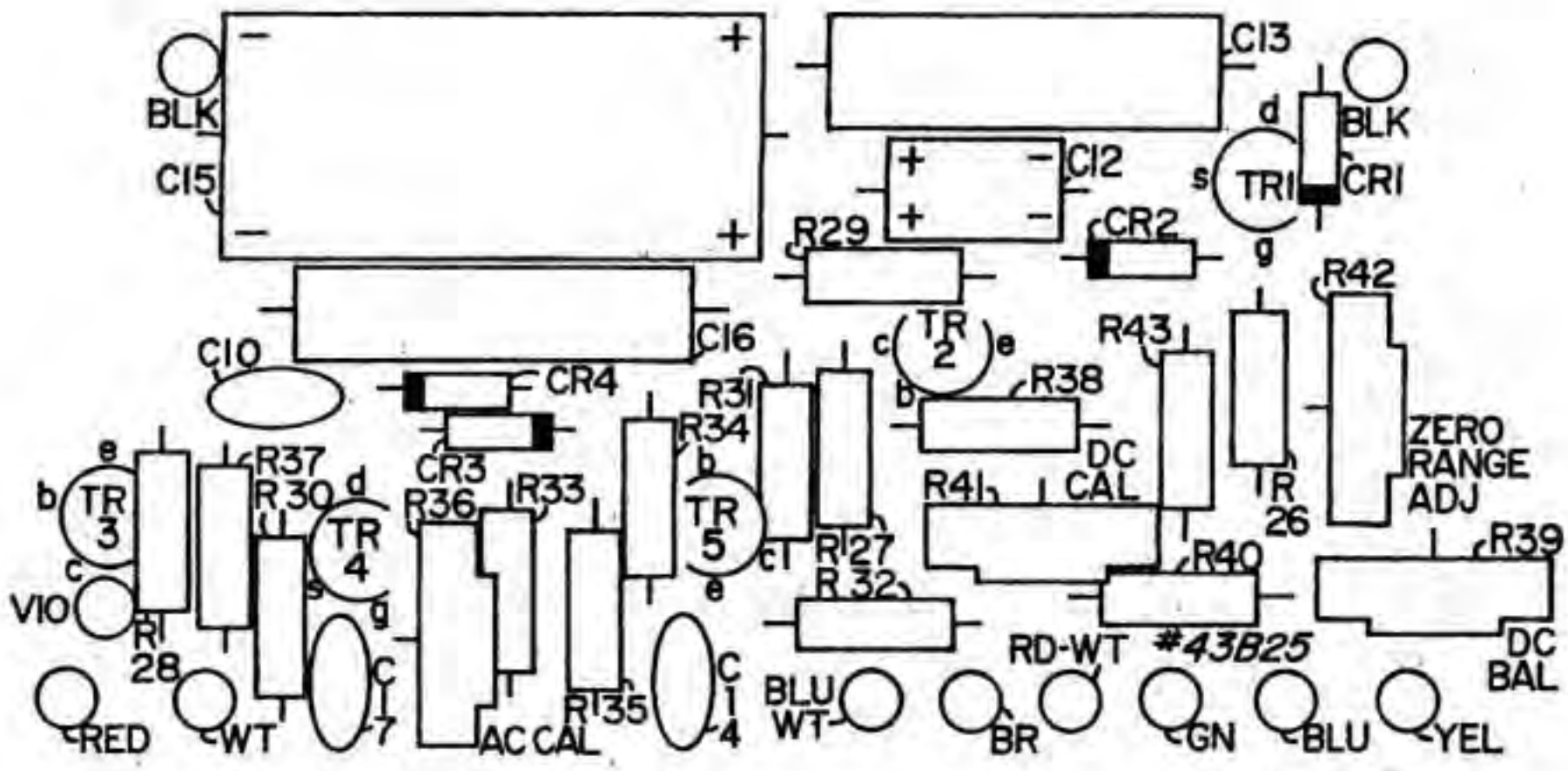

FE20 PC BOARD

FE160 Schematic Reference	FE20 PC Board Reference	FE160 Schematic Reference	FE20 PC Board Reference
C14	C10	R49	R34
C15	C12	R50	R35
C16	C13	R51 DC Cal	R41
C17	C16	R52 Z range	R42
C18	C17	R53 DC Bal	R39
C19	C14	R54	R40
C20	C15	Jumper	R38
		Jumper	R43
R40	R26	Not used	R37
R41	R27	TR1	TR1
R42	R28	TR2	TR2 & TR3
R43	R29	TR3	TR4
R44	R30	TR4	TR5
R45	R32	CR3 & 4	CR2
R46	R33	CR5	CR1
R47 AC Cal	R36	CR6	CR3
R48	R31	CR7	CR4

PRINTED IN USA

SCHEMATIC REFERENCE	PART NO.	DESCRIPTION	PRICE
CAPACITORS			
C1	24G224	.047uf. 1KV 20% MYLAR	.25
C5	24G220	39pf, 700V DISC	.25
C6	24G278	75pf, 630V POLY 2.5%	.25
C7	24G217	300pf, 63V POLY 5%	.25
C8	24G188	.001uf, 33V POLY	.25
C9	24G182	3300pf, 33V POLY 5%	.25
C10	24G183	.01uf, 33V POLY 5%	.25
C11	24G184	.033uf, 63V POLY 5%	.25
C28	24G216	.1uf, 100V MYLAR 10%	.25
C29	24G168	.22uf	.25
RESISTORS			
R1	14A70-1	32.5 MEG, 1W, 12.5KV, 2%	1.75
R3	3 1/4" 42-12	.5756 ohms/ft	.75
R4	14C29-3006	3 MEG, 1/2W, 1%	.75
R5	14C4-105	1 MEG, 1/2W, 5%	.25
R6, 7, 8	14C4-186	18 MEG, 1/2W, 5%	.25
R10	14A42-3830	3.83 ohms, 1/2W, 2%	.75
R11	14A41-5931	59.3 ohms, 1/2W, 1%	.75
R12	14C29-6002	600 ohms, 1/2W, 1%	.75
R13	14C29-6003	6K, 1/2W, 1%	.75
R14	14C29-6004	60K, 1/2W, 1%	.75
R15	14A41-6065	606K, 1/2W, 1%	.75
R16	14A41-6676	6.67 MEG, 1/2W, 1%	.75
R17	14C31-8206	8.2 MEG, 1W, 1/2%	1.25
R18	14C28-2606	2.6 MEG, 1/2W, 1/2%	1.25
R19	14C28-8205	820K, 1/2W, 1/2%	1.25
R20	14C28-2605	260K, 1/2W, 1/2%	1.25
R21	14C28-8204	82K, 1/2W, 1/2%	1.25
R22	14C28-2604	26K, 1/2W, 1/2%	1.25
R23	14C28-8203	8.2K, 1/2W, 1/2%	1.25
R24	14C28-2603	2.6K, 1/2W, 1/2%	1.25
R25	14C28-1203	1.2K, 1/2W, 1/2%	1.25
R26	14A52-11	165K, 1/2W, 1%	.75
R27	14A41-6675	667K, 1/2W, 1%	.75
R29	14C29-3163	3.16K, 1/2W, 1%	.75
R30	14C29-1003	1K, 1/2W, 1%	.75
R31	14C29-3162	316 ohms, 1/2W, 1%	.75
R32	14C29-1002	100 ohms, 1/2W, 1%	.75
R33	14C29-3161	31.6 ohms, 1/2W, 1%	.75
R34	14C29-1001	10 ohms, 1/2W, 1%	.75
R35	14C29-3160	3.16 ohms, 1/2W, 1%	.75
R36	14C29-1000	31.6 ohms, 1/2W, 1%	1.00
R37	6 3/4" 42-12	.5756 ohm/ft wire	.75
R45	14C4-152	1.5K, 1/2W, 5%	.25
R48	14C4-224	220K, 1/2W, 5%	.25
R63	14A53-4	8.2 ohms 1W, 5%	.25

R64	14A53-3	.56 ohm, 1/2W, 5%	.25
SEMICONDUCTORS			
TR1, 3	19C6-1	2N5163 FET (specify color)	1.25
TR2	19C14-2	TD401 PNP dual	4.25
TR4	19C4-1	2N5172 NPN	.50
TR5	19C17-1	D40D1 NPN	1.25
CR1, 2, 10 11, 12, 13, 14, 15, 16, 17, 18	16S10	Rect. Sil. 1 amp 400PIV	.50
CR3, 4, 5	50C5-1	1N456	.50
CR6, 7, 8	50C3-2	1N695	.25
CR9	50C4-7	10V Zener	.75
CONTROLS			
R9	15C7-7	5MEG, Vert, PC.	.50
R47	15C7-6	500K, Vert, PC.	.75
R51, 59	15C7-9	100 ohm, VERT, PC.	.50
R52, 53	15C7-2	10K, Vert, PC.	.75
R55	15C1-11	2K PANEL MT.	.75
R60	15C1-10	100 ohms, PANEL MT.	.75
MISCELLANEOUS			
M1	23C40	500uA, 90 ohms	24.00
S1	25A148-1	Range switch	9.25
S1 wired	125A148-1	Range switch wired	29.75
S2	25A148-2	Function switch	9.25
S2 wired	125A148-2	Function switch wired	22.75
	39G33	Test probe complete with cable for FE160	5.00
	25A132	Mini slide switch for probe	1.25
	39A30	High Voltage Probe	12.00

T1

28 B43

NOTE:
VOLTAGES TAKEN WITH FUNCTION ON +DCV AND RANGE ON 1000.

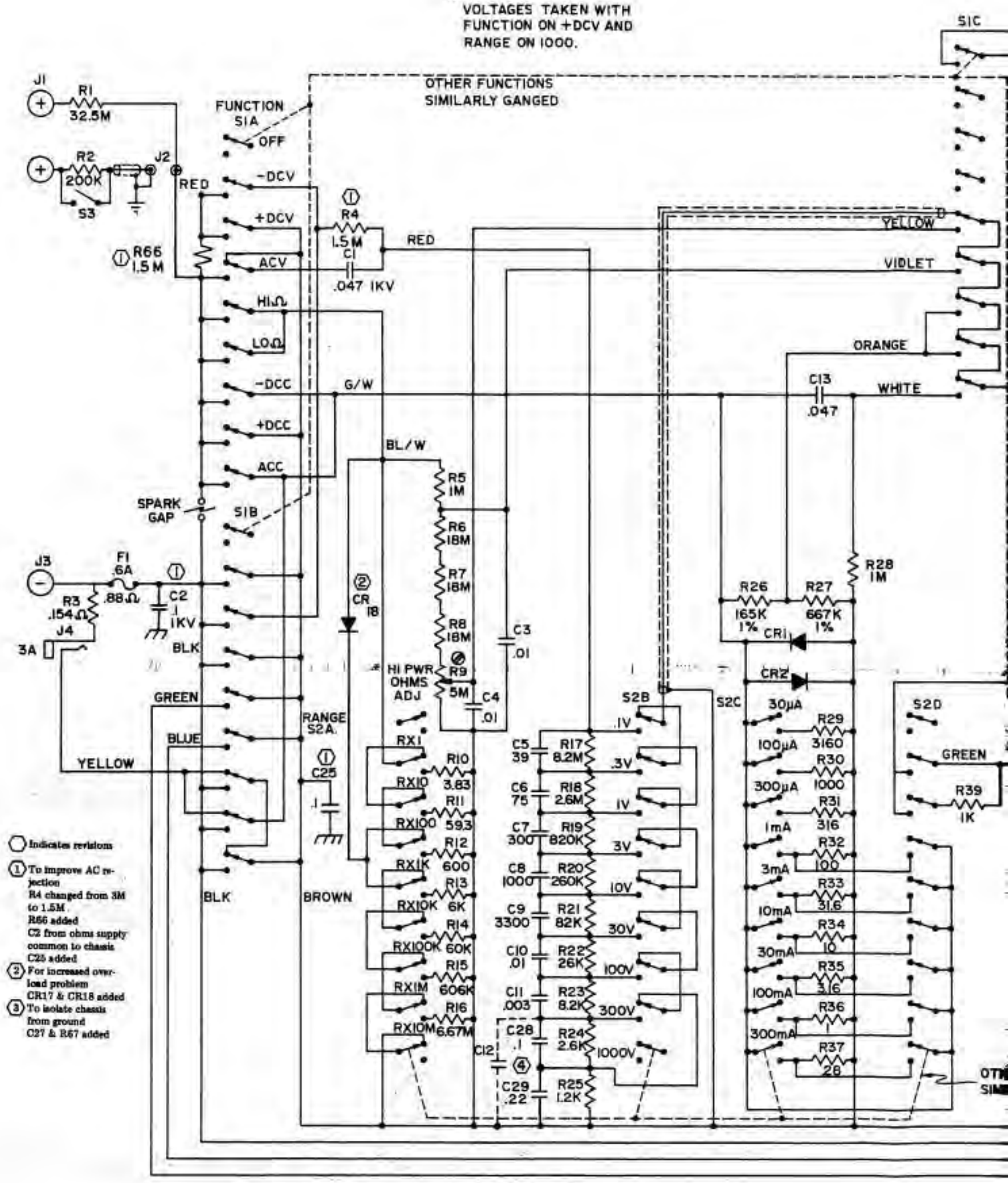

LAST R R67 (R38 MISSING)
LAST C C29
LAST CR CR18
LAST TR TR5
UNLESS OTHERWISE SPECIFIED ALL DIODES ARE 1AMP 400PIV

FE160 FE METER

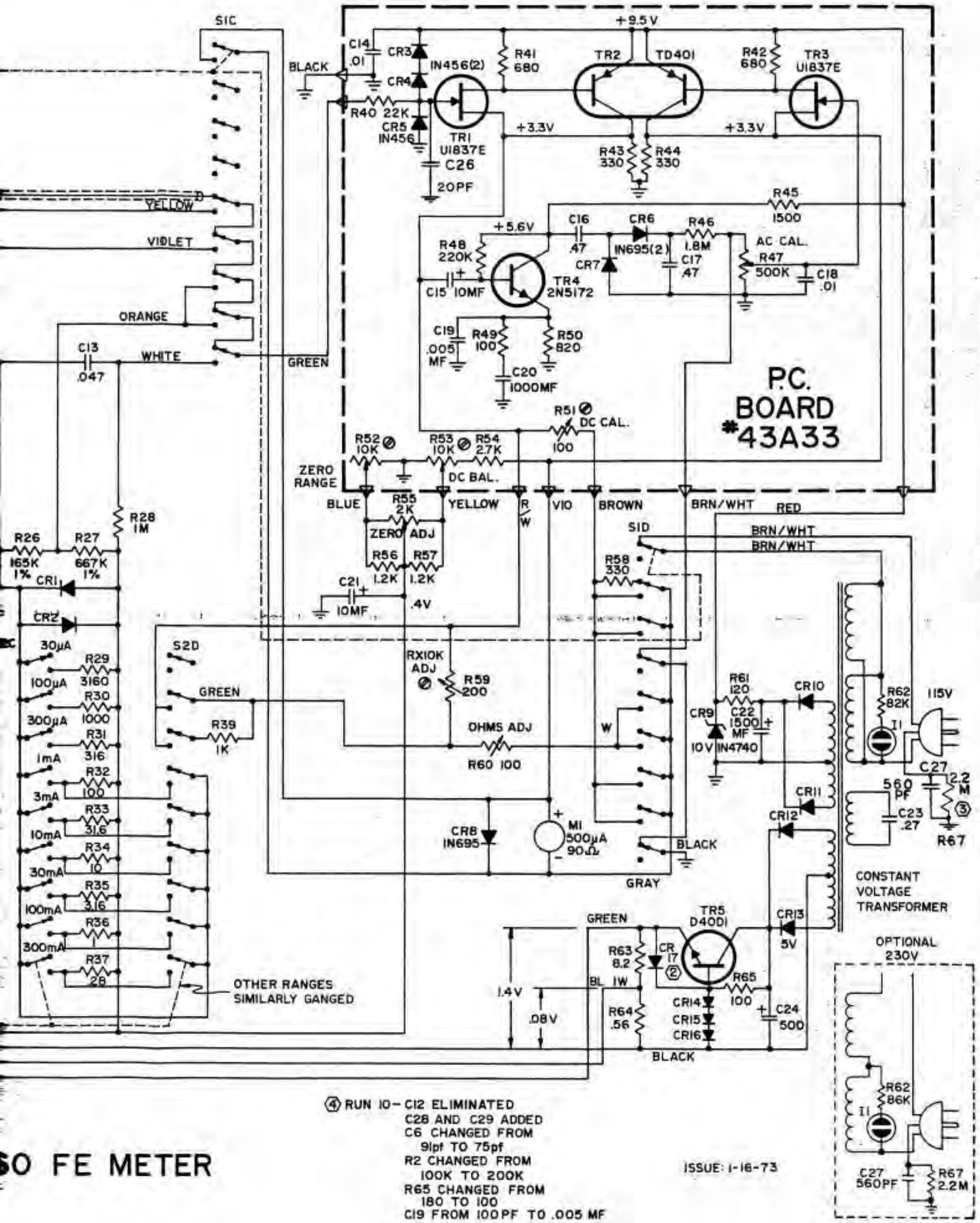

SO FE METER

④ RUN 10 – C12 ELIMINATED
C28 AND C29 ADDED
C6 CHANGED FROM 91pf TO 75pf
R2 CHANGED FROM 100K TO 200K
R65 CHANGED FROM 180 TO 100
C19 FROM 100PF TO .005 MF

ISSUE: 1-16-73